Do you know what your chair can do?

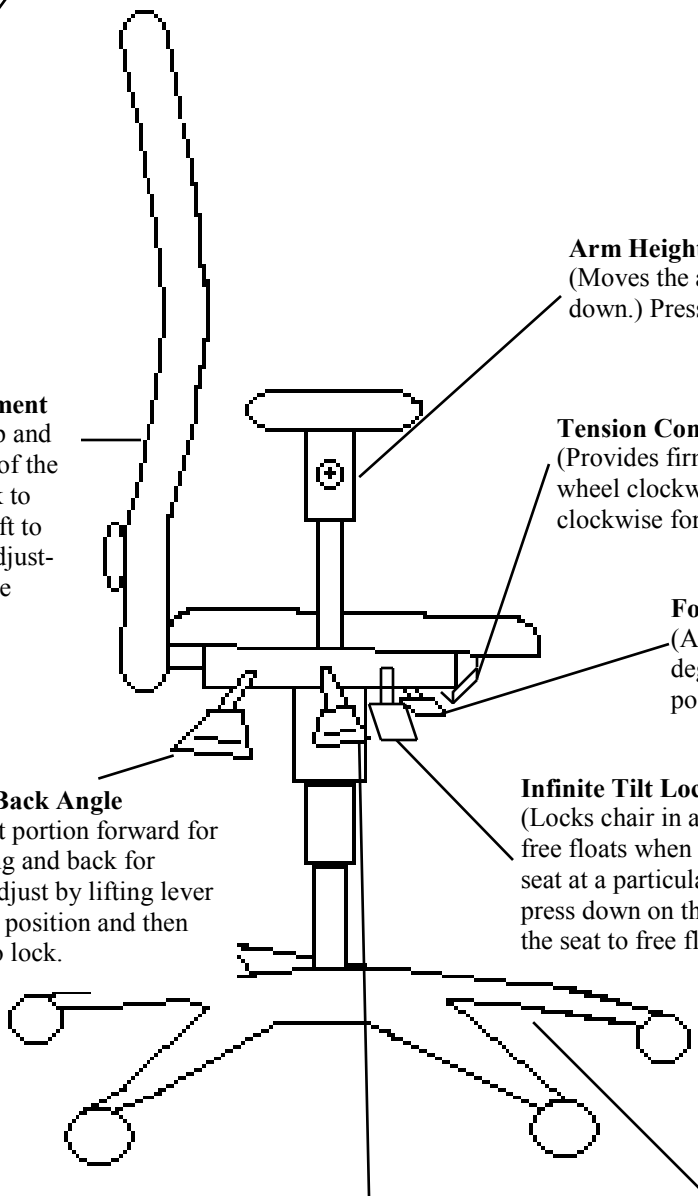

Arm Height Adjustment
(Moves the arm rest up and down.) Press button to move.

Lumbar Height Adjustment
(Moves the entire back up and down to adjust the curve of the back.) Lift up on the back to adjust the back height. Lift to the 6th position (rachet adjustment) to return back to the lowest position.

Tension Control
(Provides firmer or softer recline.) Turn hand wheel clockwise for more tension, counter clockwise for less tension.

Forward Tilt
(Allows a forward tilt up to –3 degrees) Twist lever to desired position.

Adjustable Back Angle
(Tilts the seat portion forward for support typing and back for reclining.) Adjust by lifting lever up to desired position and then push down to lock.

Infinite Tilt Lock
(Locks chair in any position and free floats when unlocked) To lock seat at a particular tilt position, press down on the lever. To allow the seat to free float, lift the lever.

Pneumatic Lift
(Moves the entire chair up and down.) Raise seat by lifting your weight off the seat and pull up on the lever until desired height, then release. To lower, lift up on lever while seated until desired height then release lever.

Five Point Base
(Adds stability to chair. A six point base indicates a big and tall model chair.)